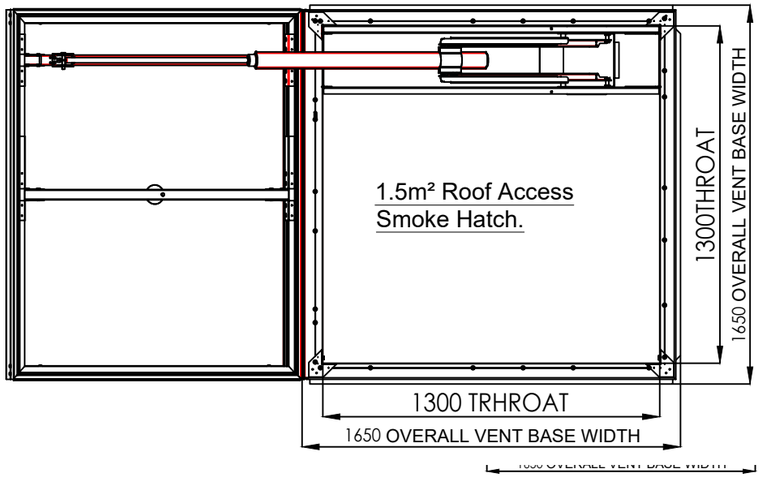

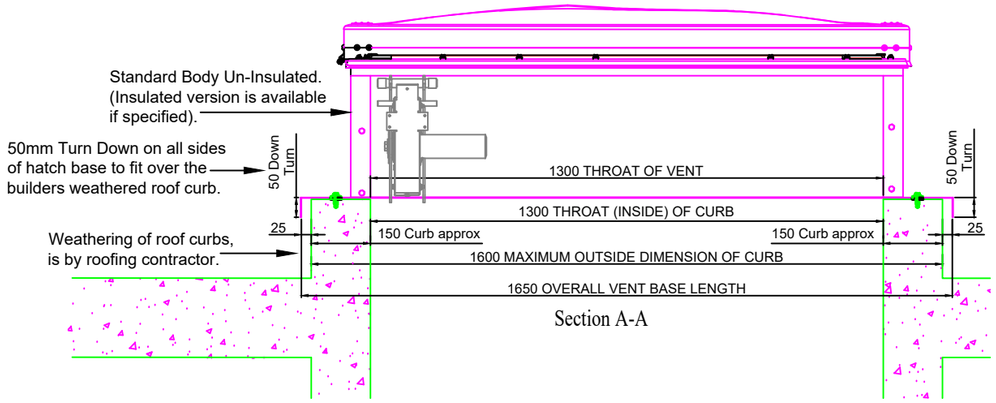

Section A-A

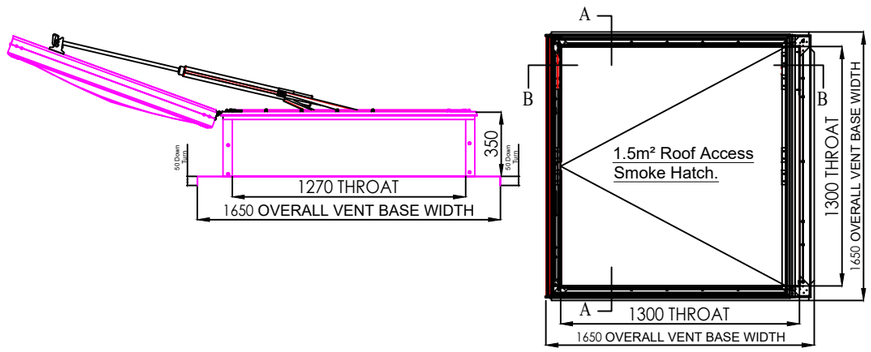

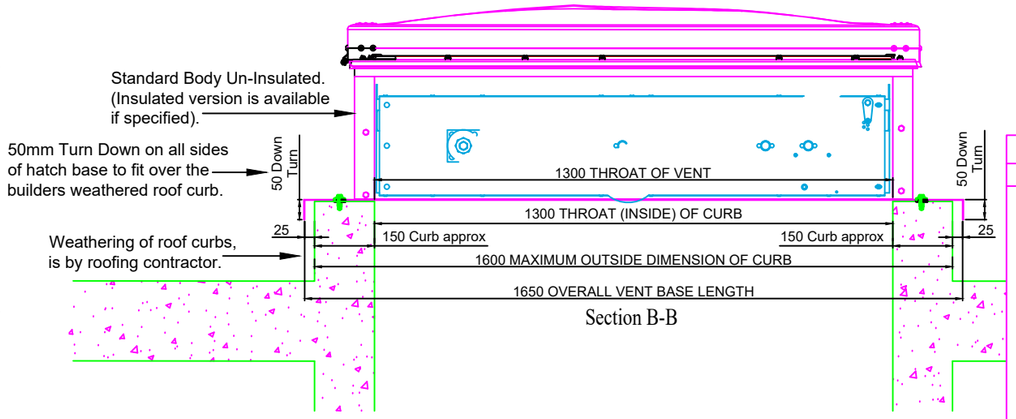

Section B-B

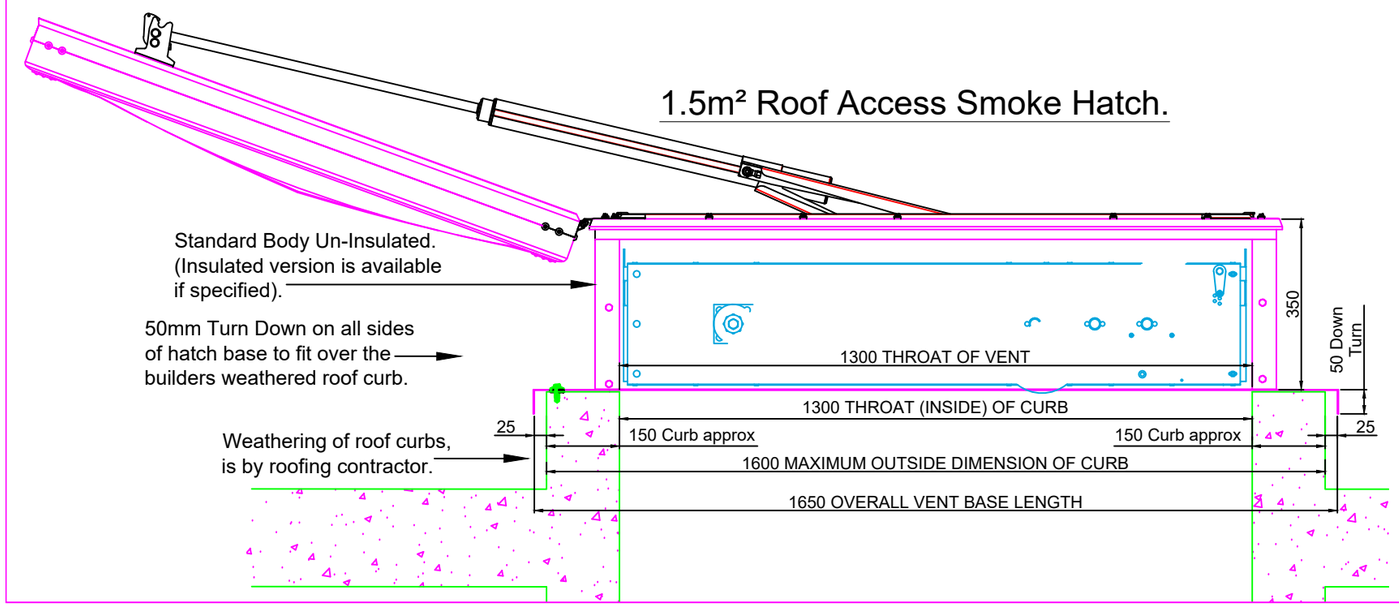

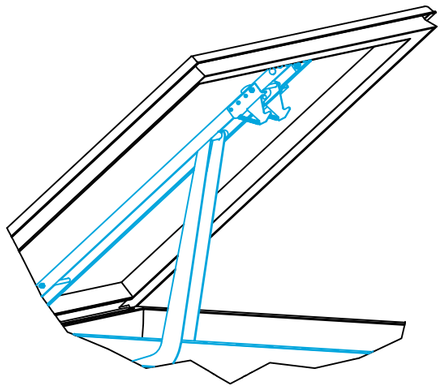

3D Hatch (Opened)

Revision(s)

Rev'n	Change	Date

HUNTER PRODUCTS LTD

This drawing is copyright.©

Hunter Products Ltd, Bridge House,
Station Yard, Halifax Road, Liversedge,
West Yorkshire, WF15 6PS

Tel: 01422 825940

Email: TBC
Web: TBC

DRAWING NUMBER **REV**
-

PROJECT
1.5m2 Roof Access Hatch with 50mm Down Turn Base & Curb Detail.

DRAWING DATE 29/06/2019
DRAWN BY KH
SCALE AT A3 NTS
TAB NAME 1.5M2 ACCESS HATCH 50MM DOWN TURN

CONTRACT NUMBER

ESTIMATE NUMBER

STATUS
COMMENT / APPROVAL